FIREPLACE ORDER # : 82048ST

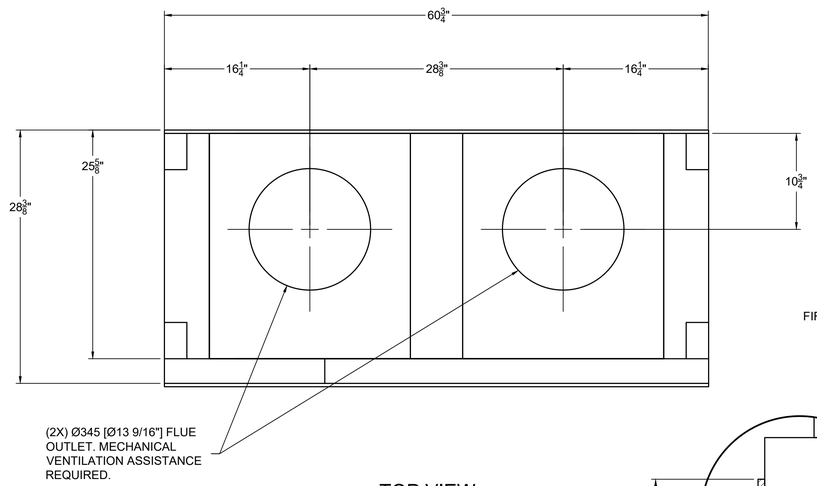

TOP VIEW

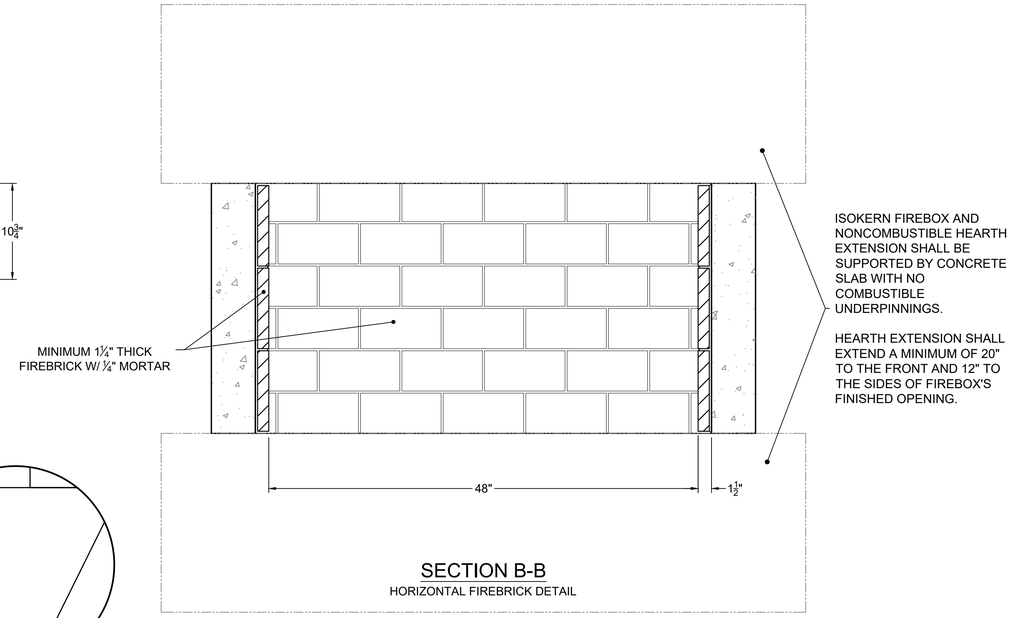

SECTION B-B

HORIZONTAL FIREBRICK DETAIL

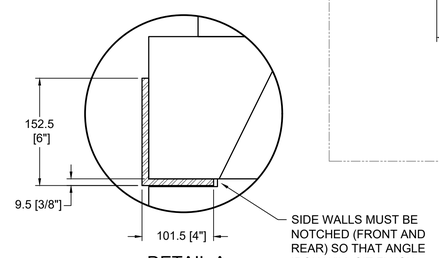

DETAIL A

DAMPER SUPPORT ANGLE

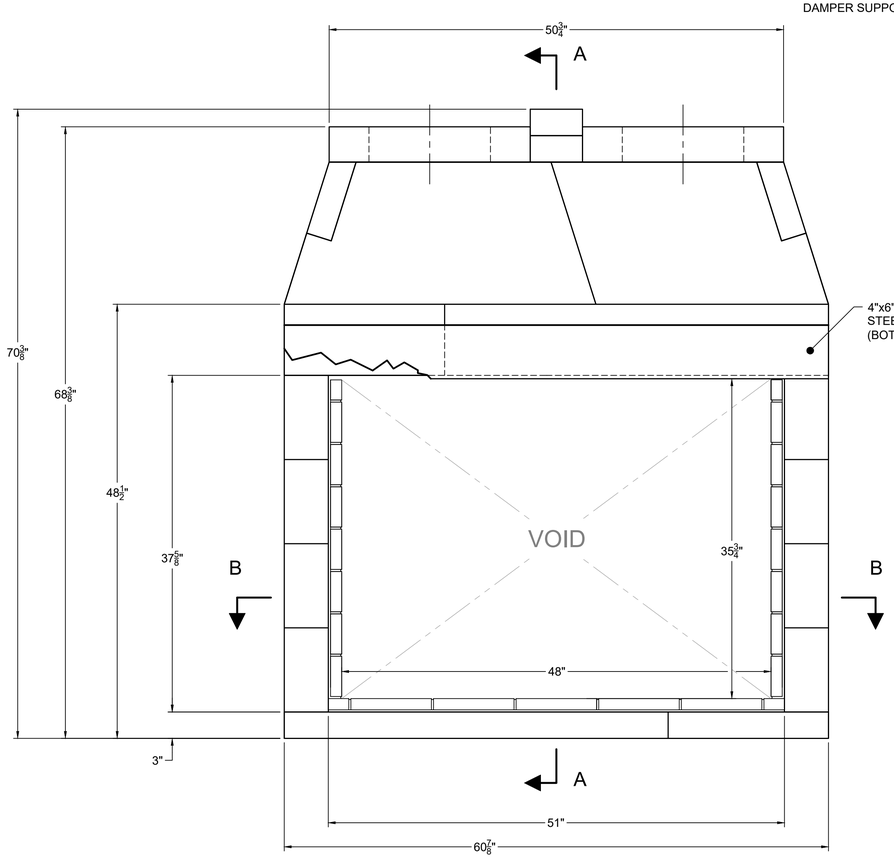

FRONT VIEW

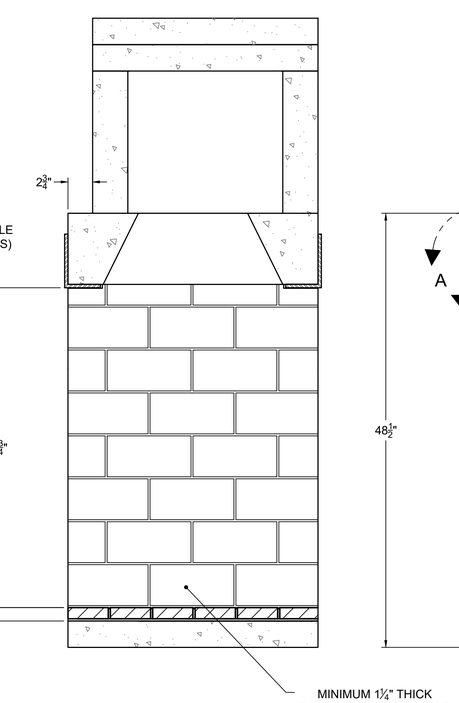

SECTION A-A

HORIZONTAL FIREBRICK DETAIL

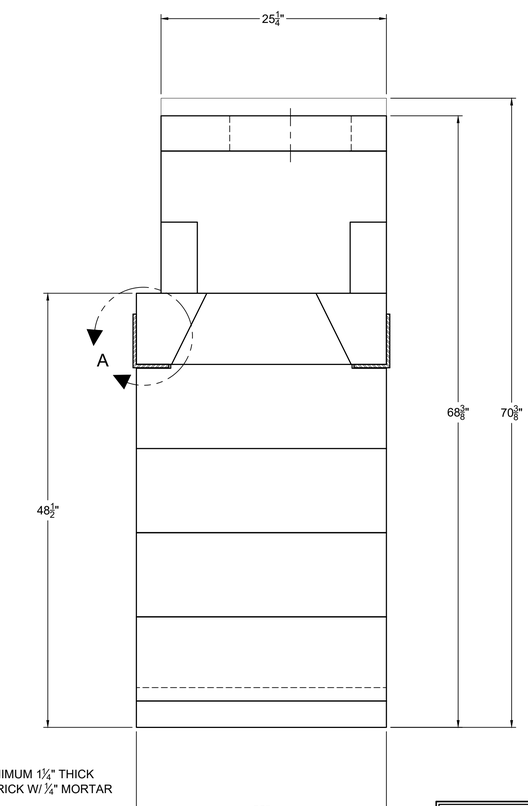

RIGHT-SIDE VIEW

GENERAL NOTES

1. THIS CUSTOM ISOKERN FIREPLACE CARRIES NO LISTING, UL OR OTHERWISE.
2. FIREPLACE SHALL BE INSTALLED WITH THE MINIMUM CLEARANCES TO COMBUSTIBLES AS LISTED BELOW. NOTE: HEARTH EXTENSION REQUIREMENTS AND ALL CLEARANCES AS MEASURED FROM OPENINGS SHALL APPLY TO ALL OPEN SIDES OF THE FIREPLACE :
   - SMOKE DOME FRONT AND ISOKERN CHIMNEY: 0"
   - SIDES AND REAR: 1.5"
   - COMBUSTIBLE SHEATHING ABOVE OPENING TOP: 8"
   - SHEATHING OR TRIM TO OPENING SIDES: 8"
   - MANTEL ABOVE OPENING: 14"
   - OPENING TO SIDEWALLS: 26"
   - HEARTH EXTENSION BEYOND FRONT: 20"
   - HEARTH EXTENSION BEYOND SIDES (FINISHED): 12"
   - COMBUSTIBLE FLOOR: NOT ALLOWED
   - INSULATION FROM FIREBOX (UNSHIELDED): 3"
3. THE FIREPLACE AND NONCOMBUSTIBLE HEARTH EXTENSION SHALL REST ATOP A NONCOMBUSTIBLE FLOORING SYSTEM WITH NO WOODEN UNDERPINNINGS.
4. MECHANICAL VENTILATION ASSISTANCE IS REQUIRED FOR THIS DESIGN. A MECHANICAL DRAFT COMPANY SHALL BE CONSULTED TO SPECIFY VENTILATION SYSTEM COMPONENTS/ CAPACITY BASED ON SPECIFIC INSTALLATION REQUIREMENTS.
5. IF YOU INSTALL A VENTED GAS LOG SET (DECORATIVE GAS APPLIANCE), THE LOG SET MUST COMPLY WITH THE STANDARD FOR DECORATIVE GAS APPLIANCE FOR INSTALLATION IN SOLID FUEL BURNING FIREPLACES, ANSI Z21.60 OR Z21.84 AND SHALL ALSO BE INSTALLED IN ACCORDANCE WITH THE NATIONAL FUEL GAS CODE, ANSI 7223/ NFPA 54; LATEST EDITION. IF YOU WISH TO INSTALL AN UNVENTED (VENT-FREE) GAS LOG SET, ONLY UNVENTED GAS LOG SETS WHICH HAVE BEEN FOUND TO COMPLY WITH THE STANDARD FOR UNVENTED ROOM HEATERS, ANSI Z21.11.2 ARE TO BE INSTALLED IN THIS FIREPLACE. CHECK LOCAL CODES FOR COMPLAINCE FOR UNVENTED (VENT FREE) GAS LOG SETS.
6. 4" COMBUSTION AIR INLET KITS ARE RECOMMENDED BY EARTHCORE FOR THE STANDARD AND MAGNUM SERIES FIREPLACES AND MAY HELP IMPROVE FIREPLACE OPERATION IN HOMES TIGHTLY SEALED AND WITH OTHER VENTILATING APPLIANCES INSTALLED. IF THE INSTALLATION IS TO BE LONGER THAN TEN FEET (10'), THEN THE SIX INCH (6") ADAPTER WILL BE NEEDED. THIS ADAPTER WILL ATTACH TO THE EXISTING FOUR INCH (4") SLEEVE OUTSIDE OF THE UNIT. THE SIX INCH ADAPTER INCLUDES AN ADDITIONAL TWENTY FEET OF 6" FLEX HOSE, FOR A MAXIMUM RUN OF THIRTY FEET (30').
7. DRAWINGS ARE FOR DESIGN PURPOSES ONLY AND ARE THE SOLE PROPERTY OF EARTHCORE INDUSTRIES. ANY REPRODUCTION OR UNAUTHORIZED USE IS STRICTLY PROHIBITED.
8. EARTHCORE/ ISOKERN OR ANY DIVISION THEREOF SHALL NOT BE HELD LIABLE FOR ANY INCIDENTAL OR CONSEQUENTIAL DAMAGES OR EXPENSES ARISING OUT OF THE USE OF THE FIREPLACES OR CHIMNEY SYSTEMS.
9. ALWAYS CHECK LOCAL BUILDING CODES GOVERNING FIREPLACES AND FIREPLACE INSTALLATIONS.

ISOMETRIC VIEW (N.T.S)

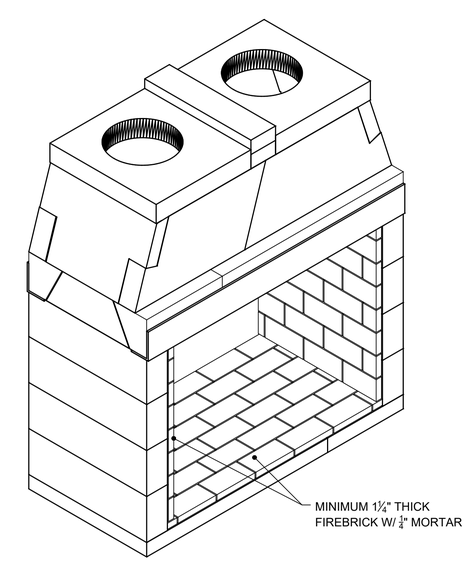

earthcore® INDUSTRIES, L.L.C.
6899 Phillips Industrial Blvd.
Jacksonville, Fl. 32256

UNLESS OTHERWISE STATED, ALL DIMENSIONS ARE IN MILLIMETERS	PROJECT: 48" MAGNUM-SEE THRU				
UNSPECIFIED TOLERANCES	THIRD ANGLE PROJECTION	DESCRIPTION: FIREPLACE CONSTRUCTION DOCUMENT			
ANG. ±		MATERIAL: E.C. PUMICE MIXTURE			
LIN. X ±		DRAWN: K.B.H	DATE: 1/3/2022	SIZE: D	SCALE: 1-1/2"=1'-0"
X ±		APPROVED:	DATE:		DO NOT SCALE
XX ±					

DRAWING #	REV.
82048ST	E

SHEET # 1 OF 1